JVC

SERVICE MANUAL

MODEL
L-E3

LINEAR TRACKING
FULLY AUTOMATIC
TURNTABLE

No. 2596
FEB. 1982

Contents

	Page
1. Service Precautions	1
2. Specifications	1
3. Names of Main Parts and Their Functions	2
4. New Technology	3
4-(1) Arm Angle Detection and Arm Drive Circuit	3
4-(2) Arm Position Detection	3
4-(3) Detection of Presence/Absence of Record and Size Select Circuit	3
4-(4) Speed Select Circuit	4
4-(5) Functions and Details of Microcomputer (UPD554C-096)	4
5. Removal Procedures	5
5-(1) Removal of Stylus and Pipe Arm	5
5-(2) Removal of Cabinet	6
6. Rope Stringing	6
7. Adjustment Procedures	6
7-(1) Arm Parallelism Adjustment	6
7-(2) Arm Offset Angle Adjustment	6
7-(3) Stylus Height Adjustment	7
7-(4) Lead-in Position Adjustment	7
7-(5) Lead-out Position Adjustment	7
7-(6) Motor RPM Adjustment	7
8. Specified Lubricants and Adhesives	7
9. Troubleshooting	8
9-(1) When Tonearm Action Is Abnormal	8
9-(2) When Turntable Operation Is Abnormal	12
10. Exploded Views and Part Numbers	14
10-(1) Motor Gear Unit	14
10-(2) Mechanism Base Unit	14
10-(3) Platter and Cabinet	15
11. Printed Circuit Board Ass'y and Parts List	17
11-(1) TXX-367 Main Amp., Power Supply & Control P.C. Board Ass'y	17
11-(2) MC-942B2 Motor Drive P.C. Board Ass'y	19
12. Power Cord Connections in Different Areas	20
12-(1) How to Handle the Solderless Connector	20
13. Packing Materials and Part Numbers	21
14. Accessories List	21
15. L-E3 Schematic Diagram	22
16. Parts List with Specified Numbers for Designated Areas	24
17. Power Specifications	24

CHECKING YOUR LINE VOLTAGE (For U.S. Military Market and Other Countries)
Before inserting the power plug, please check this setting to see that it corresponds with the line voltage in your area. If it doesn't, be sure to adjust the voltage selector switch to the proper setting before operating this equipment. The voltage selector switch is located on the bottom board.

CAUTION Before selecting the "Voltage selector switch" to proper voltage disconnect the power plug.

1. Service Precautions

- When replacing the parts marked with ⚠, be sure to use the designated parts to ensure safety.
- When removing the tonearm, the motor, or mechanisms, be sure to check or adjust the lead-in position.
- When checking a P.C. board or the like, removal of the cabinet from the bottom board causes the motor not to rotate. To solve this, remove the switch control unit (operation section) installed in the cabinet and connect to the P.C. board the socket wiring running from this unit.

2. Specifications

MOTOR SECTION

Motor	: DC type, FG servomotor
Drive system	: Direct drive
Speeds	: 33-1/3, 45 rpm
Wow and flutter	: 0.03 % (WRMS) 0.015 % (by K & K measuring method)
Signal-to-noise ratio	: More than 75 dB (DIN-B)

TONEARM SECTION

Type	: Linear tracking statically balanced low mass arm
Effective length	: 153 mm
Tracking error	: 25'

CARTRIDGE SECTION

Model	: MD-1044
Type	: Low mass type, moving magnet (MM)
Frequency response	: 10 Hz – 25,000 Hz
Output	: 2.4 mV (1,000 Hz)
Channel separation	: 25 dB (1,000 Hz) (Test record TRS-1)
Load resistance	: 47 kΩ – 100 kΩ
Compliance	: 8×10^{-6} cm/dyne (Dynamic)
Stylus tip	: 0.6 mil diamond
Stylus	: DT-37
Optimum tracking force	: $1.5^{+0.25}_{-0.5}$ g

GENERAL

Power source	: See page 24
Power consumption	: See page 24
Dimensions	: 11.4 cm(H) x 34 cm(W) x 35.8 cm(D) (Since the dimensions show only the design measurements, consideration is required when installing the unit in a limited space such as a rack, etc.)
Weight	: 5.4 kg (11.9 lbs) (without corrugated card board case)

Design and specifications subject to change without notice.

3. Names of Main Parts and Their Functions

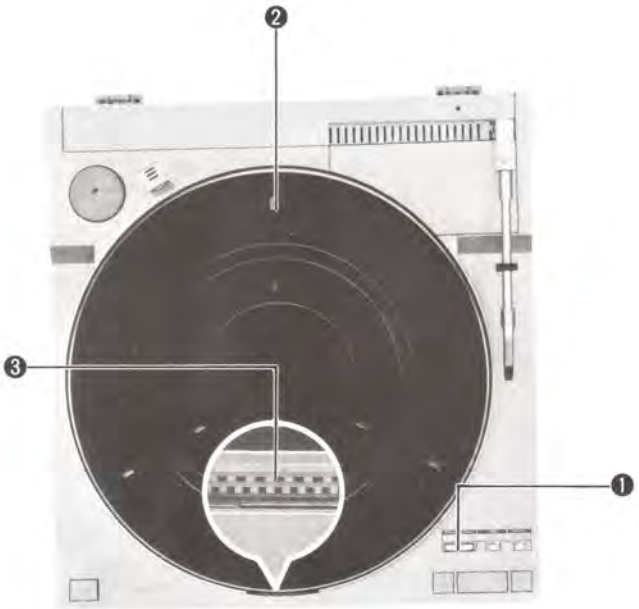

❶ **PITCH CONTROL knob**

F (fast): Slide to the left in the direction of the arrow to increase the speed.

S (slow): Slide to the right in the direction of the arrow to decrease the speed.

❷ **Sensor slit**

This slit transmits light to a sensor used for record size selection. If this slit is blocked or the turntable is used in direct sunlight or under a strong spot light, record size selection may malfunction.

❸ **Stroboscopic markings**

This turntable is provided with stroboscopic markings which indicate when it is rotating at 33-1/3 rpm. The upper band of marks is to be used in 50 Hz areas and the lower band of marks in 60 Hz areas.

Turn the pitch control until the appropriate band of marks is seen to appear stationary.

For 45 rpm, use the stroboscope plate provided.

❹ **READY switch**

Press to turn the power on. At this time, the record size sensor and strobe lamp will light.

Press again to turn the power off. Then the record size sensor and strobe lamp will go out.

Note: Even when the READY switch is off, this turntable consumes a small amount of electricity (2.4 ~ 4.7 watts). If it is not to be used for a long time, disconnect the power cord.

❺ **UP/DOWN button**

If this button is touched with the tonearm up, the tonearm will be lowered. If it is touched with the tonearm down, the tonearm will be raised. Use it for manual operation or when you want to stop playing temporarily in the middle of a record. When playing records manually, move the tonearm to the required position using the tonearm movement control, then touch this button to lower the tonearm.

❻ **Tonearm movement control**

<: Press this side to move the tonearm towards the center of the record; the tonearm stops when the button is released.

>: Press this side to move the tonearm towards the edge of the record; the tonearm stops when the button is released.

Note: Press the sides of the button; if you press the center of the button, it may cause a malfunction.

❼ **Arm rest**

Before starting to play records, release the clamp. When you finish playing records, be sure to clamp the tonearm.

❽ **SPEED select switch**

45: Slide to the left for 45 rpm regardless of record size.

AUTO: Slide to the center for automatic speed selection. 45 rpm is selected for 17 cm (7") records and 33 rpm is selected for 30 cm (12") records.

33: Slide to the right for 33-1/3 rpm regardless of record size.

❾ **REPEAT switch**

ON: Slide to the right for repeated playing of a record.

OFF: Slide to the left to release the repeat function.

❿ **START/STOP button**

If this button is touched when the platter is not moving, it acts as a start button; if it is touched while a record is being played, it acts as a stop button. When the repeat button is set to on, this button will not stop the playing of the record.

4. New Technology

4-(1) Arm Angle Detection and Arm Drive Circuit

- The angle of tonearm rotation is detected by a pair of photo-interrupter and a voltage corresponding to the output of these is applied to the mechanism motor.

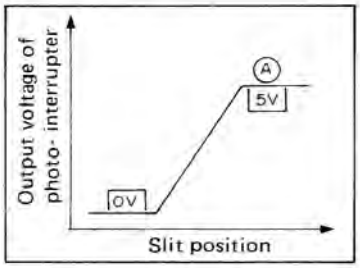

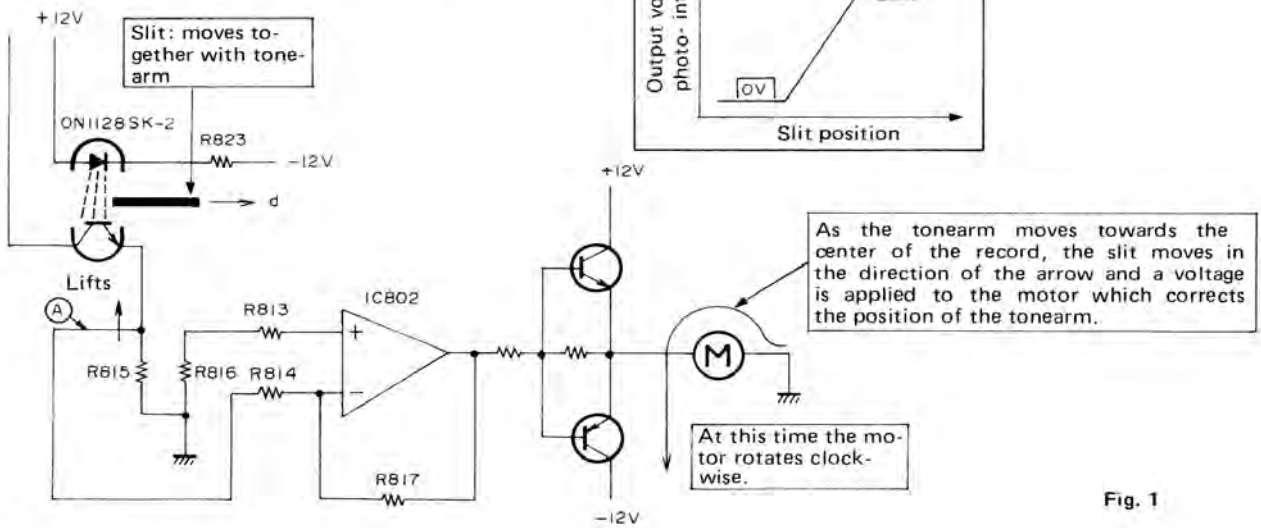

Fig. 1

4-(2) Arm Position Detection

- The lead-in and lead-out positions are detected from the number of encoder pulses with a reference (0) corresponding to the arm positioned at the rest switch position. (These pulses are counted by a microcomputer.)
- One encoder pulse is equivalent to the stylus tip moving about 0.2 mm.
- The lead-in position is adjusted with reference to the arm positioned at the rest switch.

	Number of pulses	Count with test record (RG325/Toshiba 8602-45)
30 cm lead-in	56	20 (RG325)
17 cm lead-in	348	20 (8602-45)
30 cm lead-out	480	16 (8602-45)
17 cm lead-out	501	26 (8602-45)

Table 1

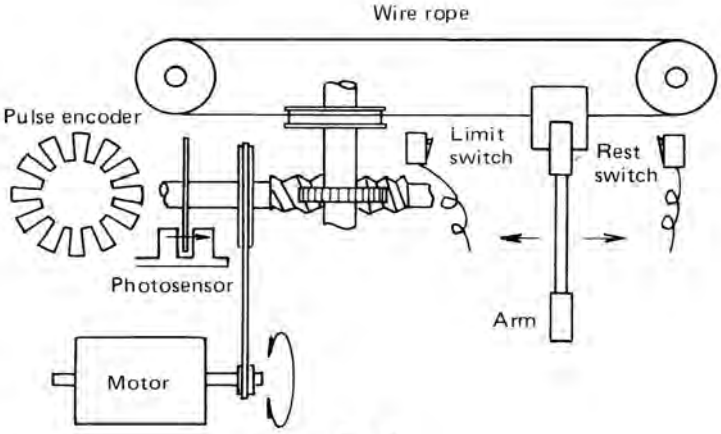

Fig. 2

4-(3) Detection of Presence/Absence of Record and Size Select Circuit

- The presence or absence of a record is detected by light from the lamp passing through the slits in the platter.

Every time a slit passes over the phototransistor, an output pulse is obtained from pins A and B.
Outputs A and B depend on the record size with "pulse present" represented by 1 and "no pulse" represented by 0.

Output	A	B
30 cm record	0	0
17 cm record	0	1
No record	1	1

Table 2

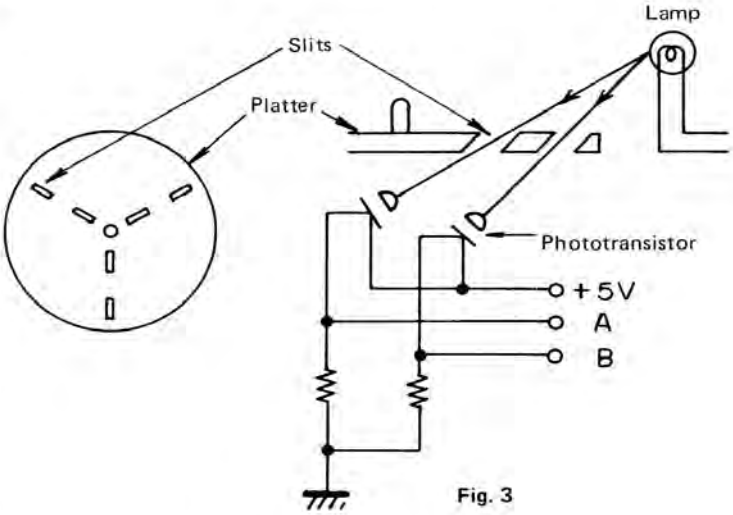

Fig. 3

Output A is used to detect the presence/absence of a record and output B the size of the record.

- Output A enters the microcomputer directly.
- Output B is converted to a continuous signal by the circuit shown in Fig. 4 before entering the microcomputer.

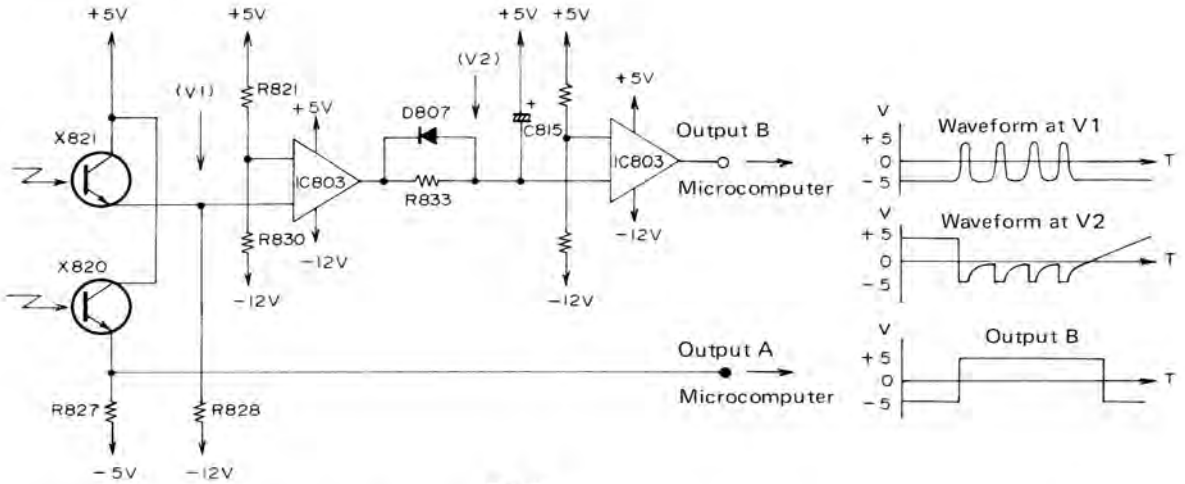

Fig. 4

4-(4) Speed Select Circuit

- The circuit selects the platter speed according to the record size. It uses analog switch TC4016BP to electrically switch between the motor terminals.
  With the speed selector set to AUTO:
  30 cm records: 33 rpm
  17 cm records: 45 rpm

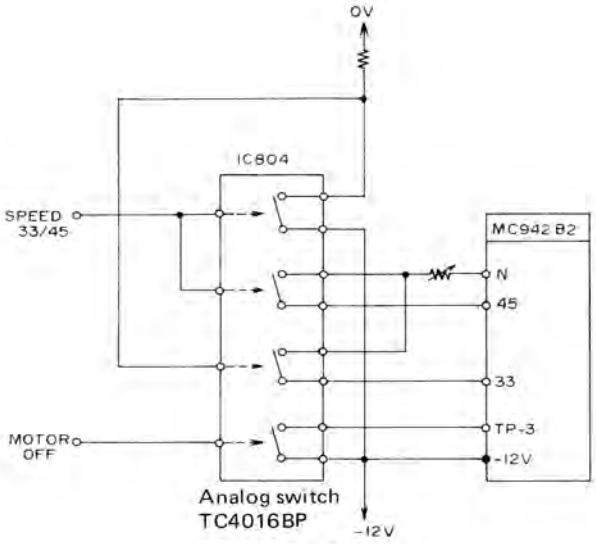

Fig. 5

4-(5) Functions and Details of Microcomputer (UPD554C-096)

1. Functions of microcomputer

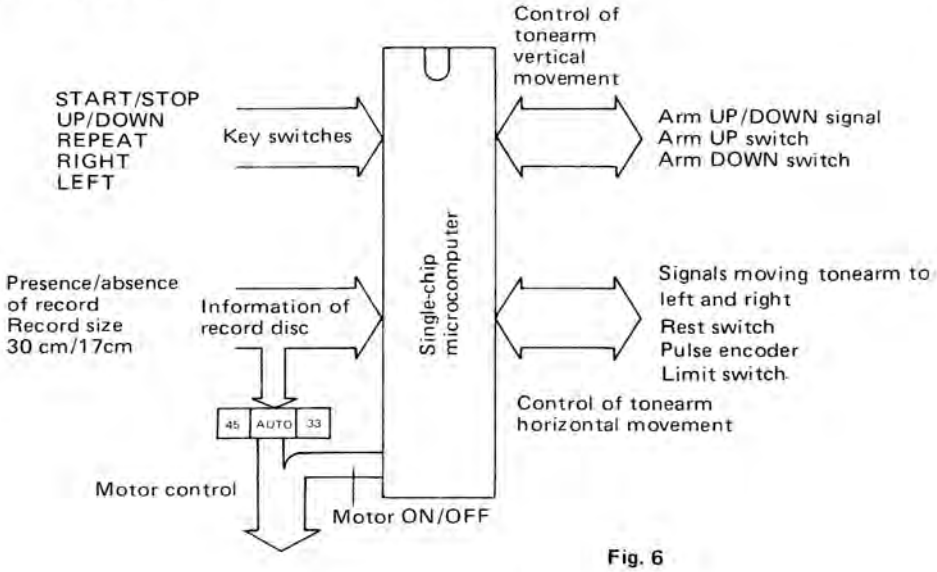

Fig. 6

2. Details of microcomputer

This IC is a 4-bit microcomputer.

Features

- Binary addition, decimal addition/subtraction, logical operation
- ROM 1,000 x 8 bits
- RAM 32 x 4 bits
- P-channel MOS
- Subroutine instruction
  One-word instruction calls 14 addresses.
  Two-word instruction calls all addresses.

Pin function

Pin (1): Oscillation input
A coil and capacitor are inserted between pin (28) and this pin.
Pin (2): Record size input (H: 17 cm)
Pin (3): Record absence/presence input
(The entry of the pulse indicates the absence of record.)
Pin (4): Rest switch input
(H: the tonearm is positioned at the rest.)
Pin (5): Limit switch input
(becomes L when the tonearm reaches the left limit.)
Pin (6): Arm UP output (H: the tonearm is lifted up.)
Pin (7): UP switch input
(becomes L when the tonearm is lifted up.)
Pin (8): DOWN switch input
(becomes H when the tonearm is lowered down on the record surface.)
Pin (9): Pulse input
Pin (10): Play output
Pin (11): Output to move the tonearm to the left.
Pin (12): NC
Pin (13): Output to move the tonearm to the right.
Pin (14): +5 V power supply

Pin location

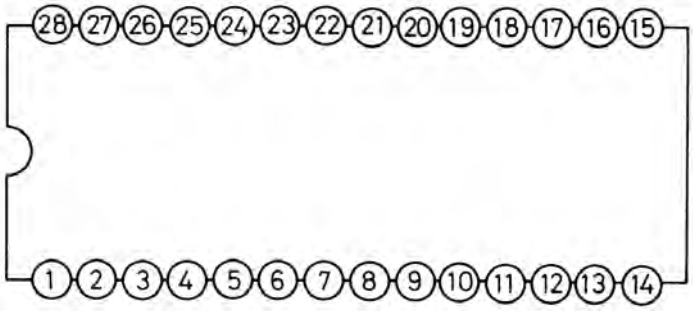

Fig. 7

Pin (15): +5 V power supply (test pin)
Pin (16): Motor control output
(The motor turns OFF when this pin is at H.)
Pin (17): NC
Pin (18): NC
Pin (19): NC
Pin (20): Repeat input
(The repeat function turns OFF when a short-circuiting is made between this pin and pin (25).)
Pin (21): Arm UP input
Pin (22): Input to move the tonearm to the left.
Pin (23): Input to move the tonearm to the right.
Pin (24): Start/stop input
Pin (25): Repeat input
(The repeat function turns OFF when a short-circuiting is made between pin (20) and this pin.)
Pin (26): Initial reset input of microcomputer
Pin (27): −5 V power supply
Pin (28): Oscillation input
A coil and capacitor are inserted between this pin and pin (1).

5. Removal Procedures

5-(1) Removal of Stylus and Pipe Arm

How to remove the old stylus

Hold the cartridge and press the end of the stylus assembly in the direction of arrow ①.

How to fit a new stylus

Being careful not to touch the stylus tip, fit the stylus assembly up to the cartridge in the direction of arrow ② so that section ③ fits correctly.
Make sure the stylus assembly is correctly in place.

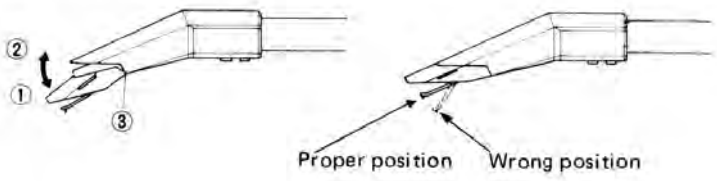

Fig. 8

To remove old cartridge

Loosen the arm pipe fixing screw and remove the arm pipe.

To fit new cartridge

Loosen the arm pipe fixing screw a little then insert the cartridge/arm pipe assembly until it stops completely; tighten the screw. Be sure to check and adjust the lead-in position after replacement of cartridge.

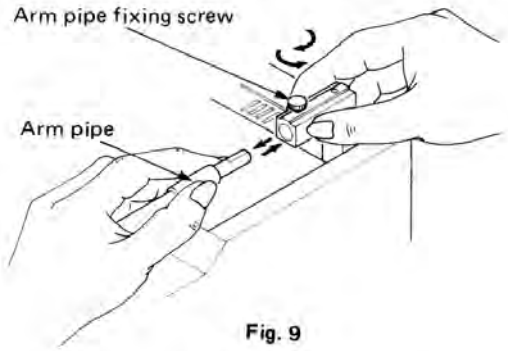

Fig. 9

5-(2) Removal of Cabinet

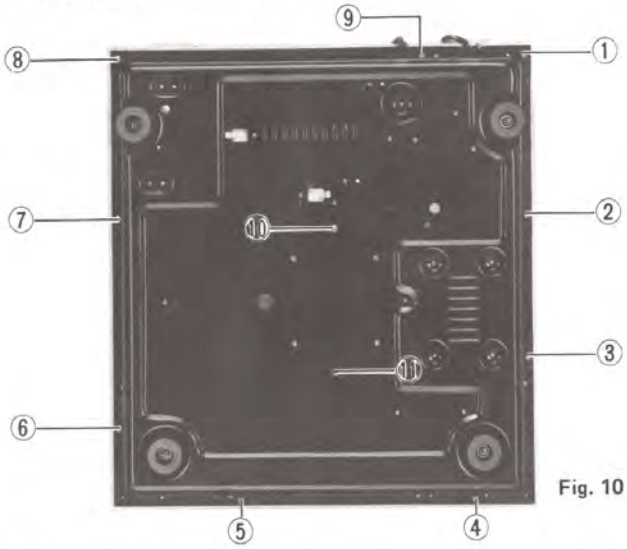

Fig. 10

1. Remove the dust cover.
2. Untighten the pipe arm securing screw, then take out the pipe arm to your side.
3. Turn the rear side out and remove screws ① – ⑪ shown in Fig. 10.

Fig. 11

4. Turn the right side up, remove screw ⑫ and then the platter cover.
5. Untighten cabinet securing screws ⑬ and ⑭, then take up the cabinet.

6. Rope Stringing

1. Turn the cut-out section Ⓐ of the pulley upwards.
2. Set the right end of the hook at almost the center of square hole Ⓑ, then put the rope.

   Notes: 1. Make distance Ⓒ between turns of rope as short as possible.
   (No distance is desirable.)
   2. Do not cross the turns of rope with each other.

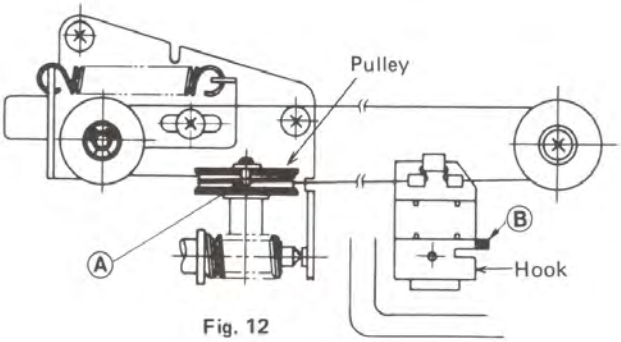

Fig. 12

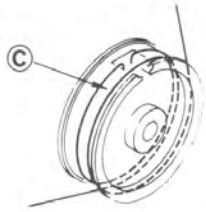

Fig. 13

7. Adjustment Procedures

7-(1) Arm Parallelism Adjustment

With the elevator lifted up, adjust the parallelism between the center line of the pipe arm (see Fig. 14) and the longitudinal outline of the mechanism base by adjuster (a).

Note: When adjusting this after arm offset angle adjustment, adjust the arm offset angle again.

7-(2) Arm Offset Angles Adjustment

1. Lift up the elevator, then remove plug P6 on the main P.C. Board.
2. Make a short-circuiting between test points TP-3 and TP-4 on the main P.C. Board.
3. Adjust the voltage between TP-1 and TP-2 to 25 – 30 mV by turning adjustment cam (b).

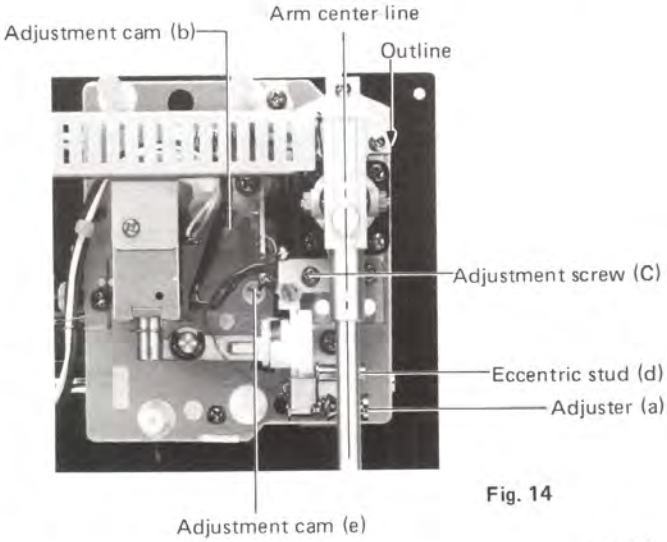

Fig. 14

7-(3) Stylus Height Adjustment

With the elevator lifted up, adjust the height from the stylus tip to the cabinet surface to 25±1 mm by adjustment screw (c).

Note: The stylus height, when the tonearm pin is in contact with adjuster ⓐ and eccentric stud ⓑ shown in Fig. 14 and 15 at the same time, should be 3.5 mm from the record surface.
(Adjust it by eccentric stud ⓑ.)

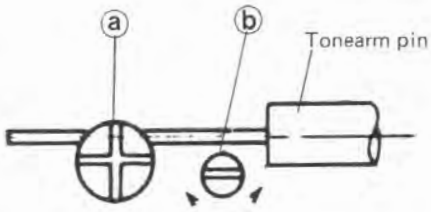

Fig. 15

7-(4) Lead-in Position Adjustment

1. With the test record (RG325), adjust the "30-cm" lead-in count to 20±3 by adjustment cam (e) shown in Fig. 14.
2. With Toshiba 8602-45 record, confirm that the "17 cm" lead-in count is 20±5.

7-(5) Lead-out Position Check

With Toshiba 8602-45 record, confirm that the "17 cm" lead-out count is 26±2.

7-(6) Motor RPM Adjustment

1. When adjusting 33-1/3 or 45 RPM, first set, in either way, the fine RPM adjustment VR (VR801) to around half the maximum resistance (the center of the rotating angle).
2. Connect an oscilloscope between TP-1 and N on the motor board as shown at right. (Fig. 16)
3. Adjustments
   33-1/3 RPM adjustment
   Set SPEED SW (SW4) to 33-1/3 RPM, then adjust the coarse adjustment VR (VR1) on the motor board so that the waveform on the oscilloscope has T = 20 msec.
   45 RPM adjustment
   Set SPEED SW (SW7) to 45 RPM, then adjust the coarse adjustment VR (VR2) on the motor board so that the waveform on the oscilloscope has T = 14.8 msec.

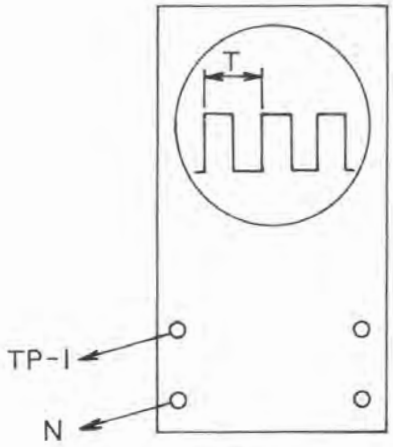

Fig. 16

8. Specified Lubricants and Adhesives

Since the lubricants and adhesives listed below are employed in L-E3, do not use those other than specified.
(See the exploded view on page 14 together.)

Name	Application point	Remarks
Silicone grease G330 (Shin'etsu Chemical)	Between elevator base and elevator	Small amount
Furoyl GP-501A Furoyl GB-TS-1 (Kanto Kasei)	Engagement section between drive gear and worm pulley Both ends of worm pulley ass'y	GP501A, GB-TS-1] 1 : 1 mix
Threebond 1401B (Three-bond)	Fixed section of pivot nut	After adjustment

Table 3

9. Trobleshooting

9-(1) When Tonearm Action Is Abnormal

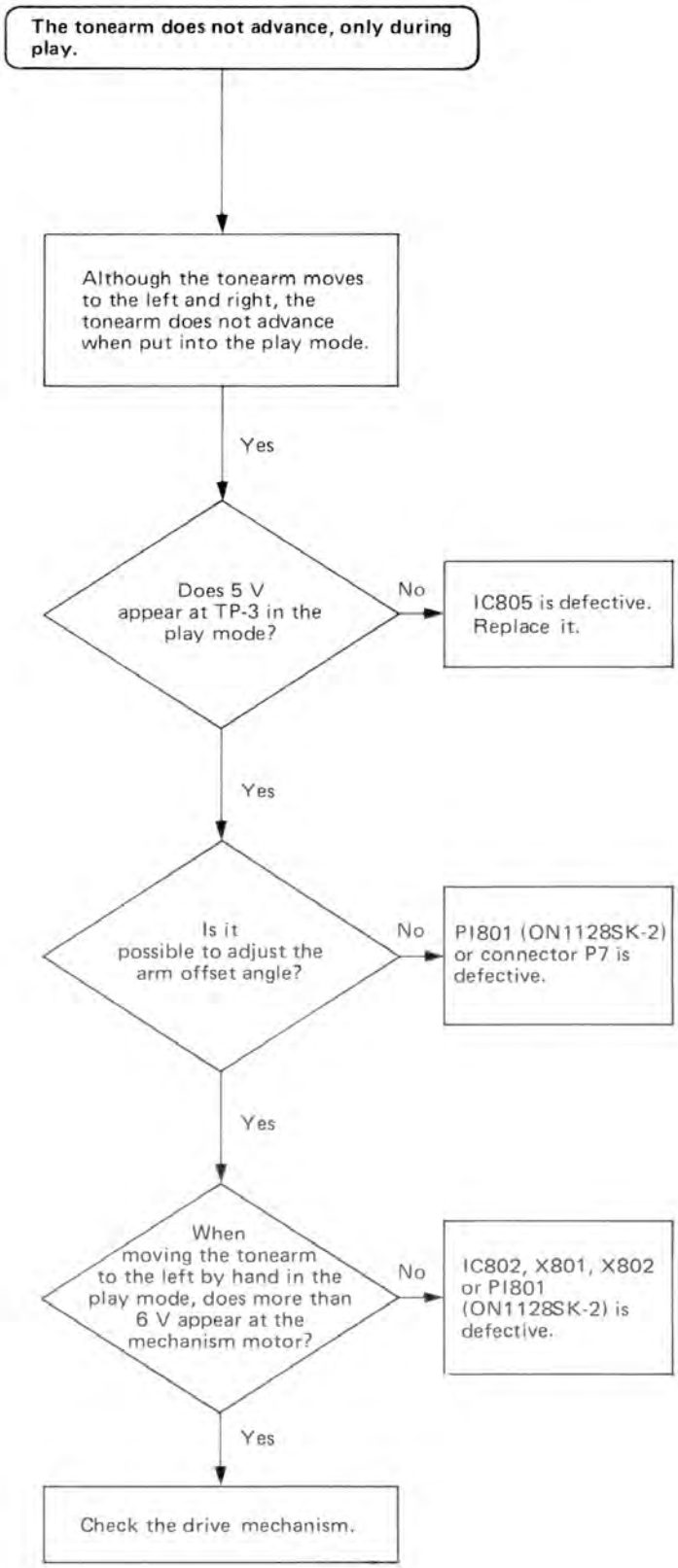

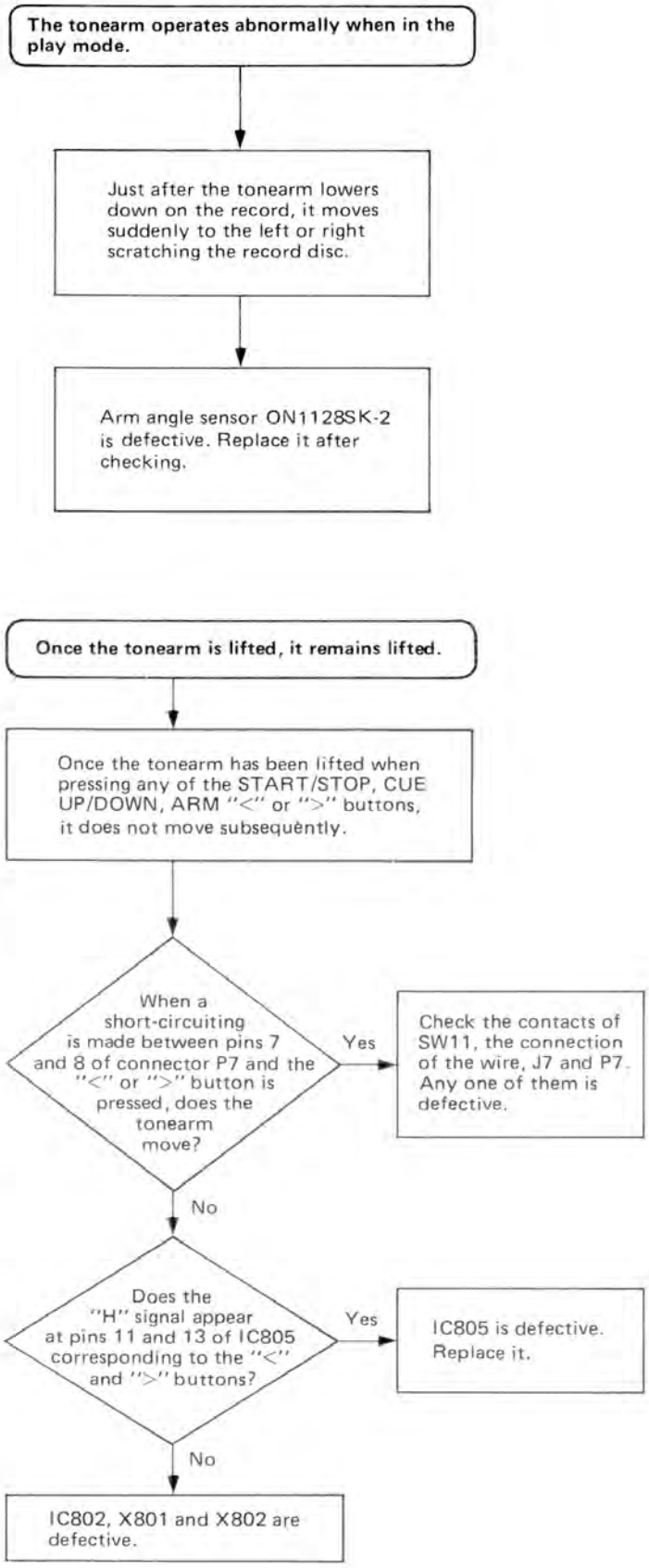

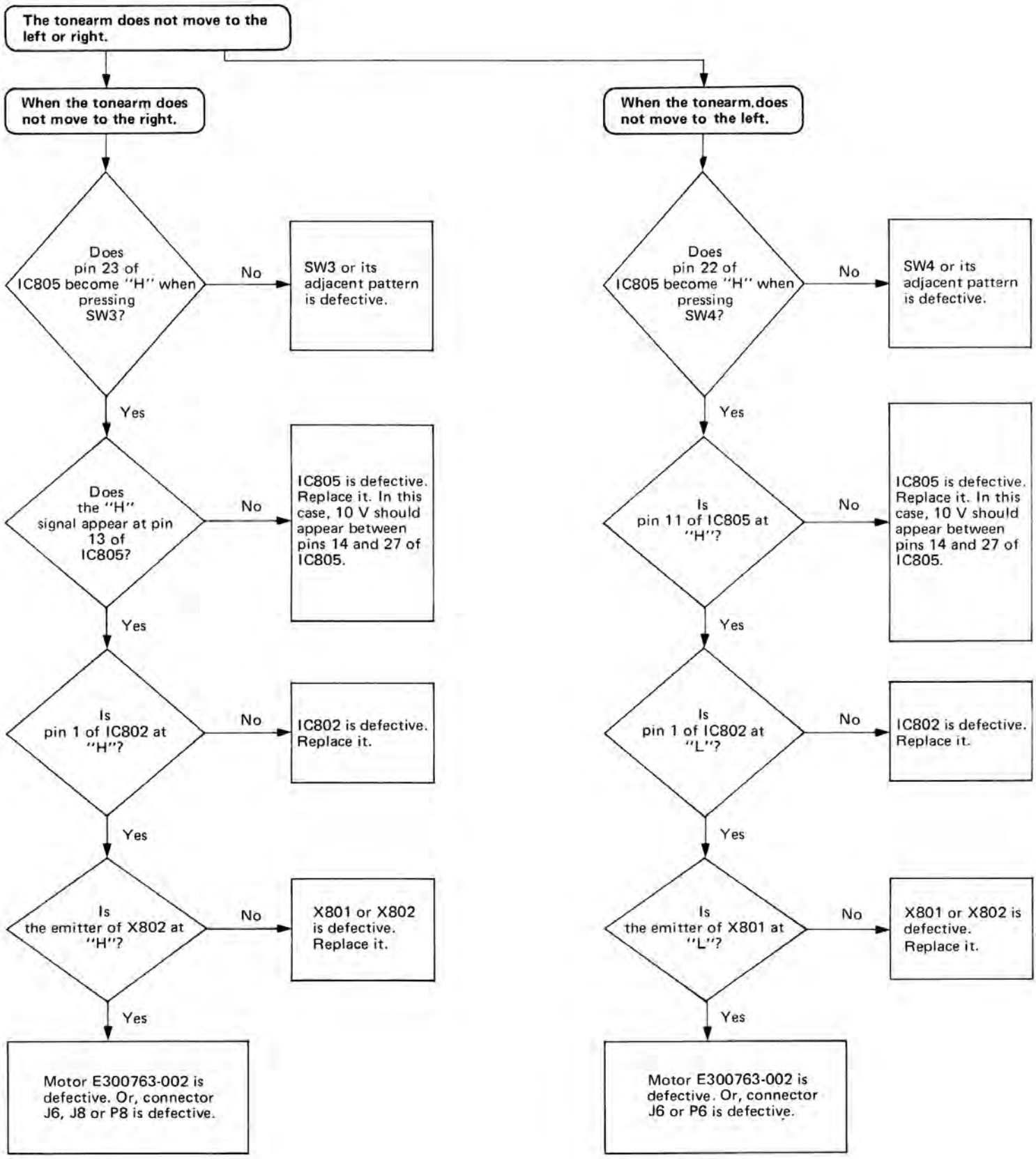

H: Positive
L: Negative

Even when the START button is pressed, the tonearm does not move.

Do ±12 V and ±5 V appear at IC801?
- No → Check the power supply circuit.
- Yes ↓

Does pin 24 of IC805 become "H" when pressing the SW2 START/STOP button?
- No → SW2 or its adjacent pattern is defective.
- Yes ↓

Does pin 6 of IC805 become "H"?
- No → IC805 is defective. Replace it. In this case, 10 V should appear between pins 14 and 27 of IC805.
- Yes ↓

Is pin 1 of IC802 at "L"?
- No → IC802 is defective. Replace it.
- Yes ↓

Is the emitter of X801 at "L"?
- No → X801 or X802 is defective. Replace it.
- Yes ↓

Motor E300763-002 is defective. Or, Connector J8 or P8 is defective.

H: +5 V
L: 0, -5, -12 V

Cueing UP/DOWN is ineffective.

Does ±12 V appear?
- No → Check the power supply circuit.
- Yes ↓

Does pin 21 of IC805 become "H" when pressing the SW5 UP/DOWN switch?
- No → SW5 or its adjacent pattern is defective.
- Yes ↓

Does pin 6 of IC805 become "H"?
- No → IC805 is defective. Replace it. In this case, 10 V should appear between pins 14 and 27 of IC805.
- Yes ↓

Is the emitter of X803 at 0 V.
- No → X803 or X804 is defective. Replace it.
- Yes ↓

When the voltage at pin 6 of IC805 is made 5V, does the collector voltage of X807 become-12 V for 0.3 to 1 sec and after that 0 V?
- No → X807 and X808 are defective. Replace them. Or, C820 is defective.
- Yes ↓

The elevator arm action is abnormal.

H: +5 V

The tonearm is led in without the record.

Is the tonearm led in even when a short-circuiting is made between pins 3 and 4 of connector P5?

Yes → IC805 is defective.

No → X820 or its associated wiring is defective.

The tonearm is led in at the "30 cm" lead-in position with a 17-cm record.

Is the tonearm led in at the "30 cm" lead-in position even when a short-circuiting is made between pins 2 and 4 of connector P5?

Yes → IC803, D807 and C815 are defective.

No → X821 or its associated wiring is defective.

Without lowering down on the record, the tonearm passes through and returns.

Does the voltage at pin 6 of IC802 continuously invert from positive to negative while the tonearm is moving?

No → P1802 (ON1128) or its associated wiring is defective.

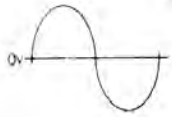

Yes → While the tonearm is moving, does a shaped waveform appear at pin 9 of IC805?

No → IC802 is defective.

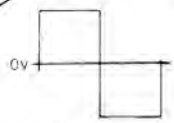

Yes → IC805 is defective.

9-(2) When Turntable Operation Is Abnormal

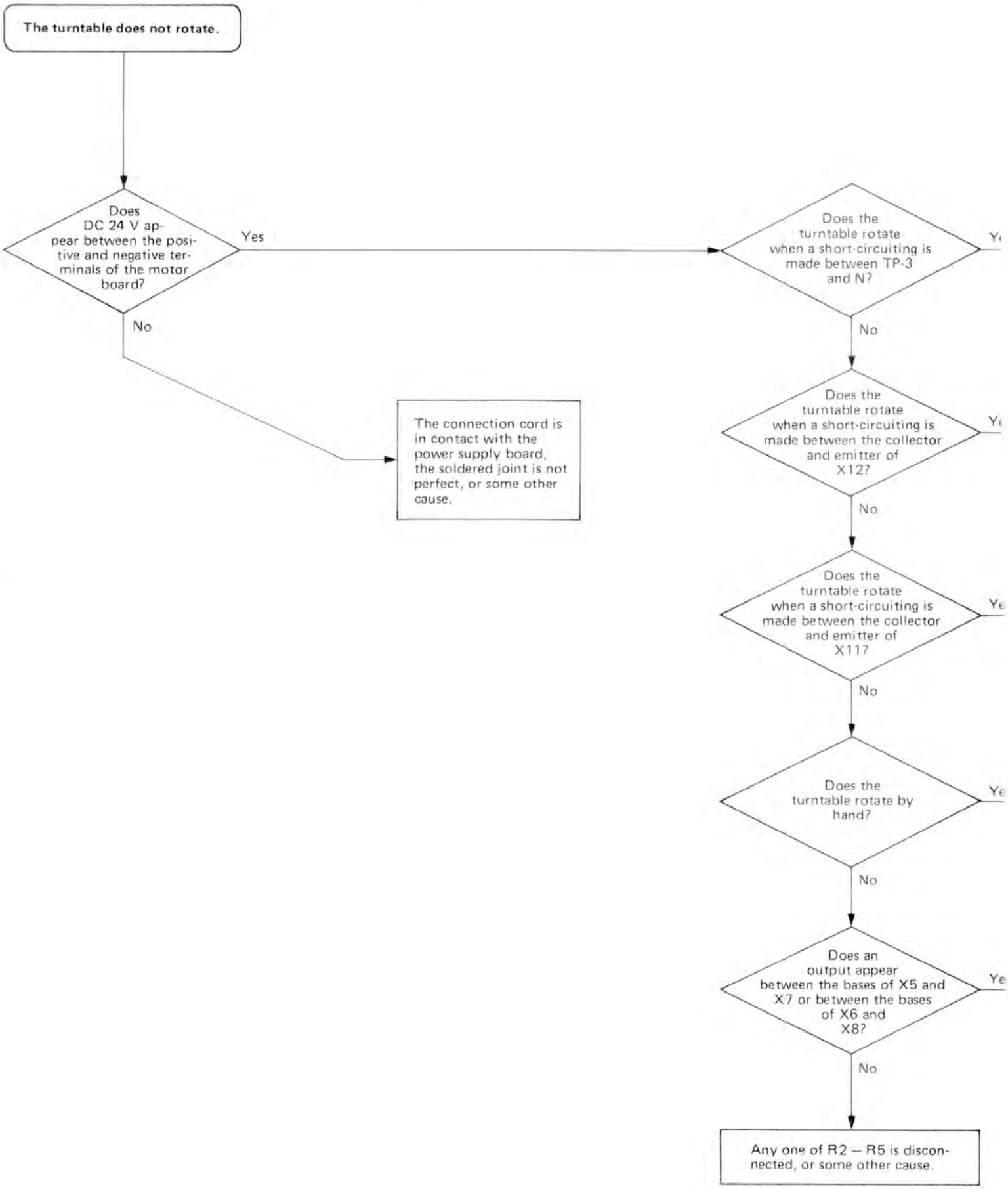

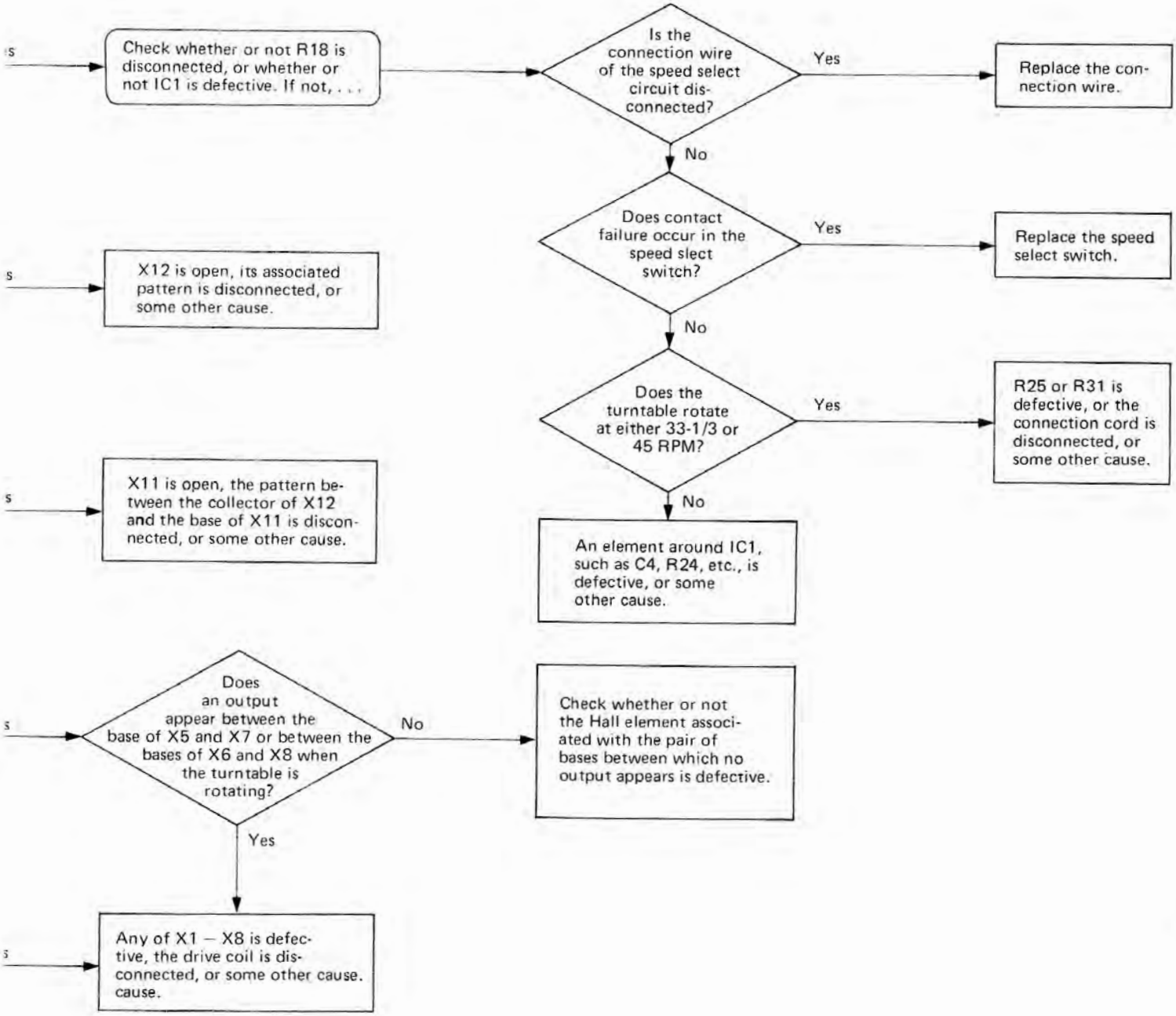
Check whether or not R18 is disconnected, or whether or not IC1 is defective. If not, . . .
Is the connection wire of the speed select circuit disconnected?
Yes
Replace the connection wire.
No
Does contact failure occur in the speed slect switch?
Yes
Replace the speed select switch.
No
Does the turntable rotate at either 33-1/3 or 45 RPM?
Yes
R25 or R31 is defective, or the connection cord is disconnected, or some other cause.
No
An element around IC1, such as C4, R24, etc., is defective, or some other cause.
X12 is open, its associated pattern is disconnected, or some other cause.
X11 is open, the pattern between the collector of X12 and the base of X11 is disconnected, or some other cause.
Does an output appear between the base of X5 and X7 or between the bases of X6 and X8 when the turntable is rotating?
No
Check whether or not the Hall element associated with the pair of bases between which no output appears is defective.
Yes
Any of X1 – X8 is defective, the drive coil is disconnected, or some other cause. cause.

10. Exploded Views and Part Numbers

10-(1) Motor Gear Unit

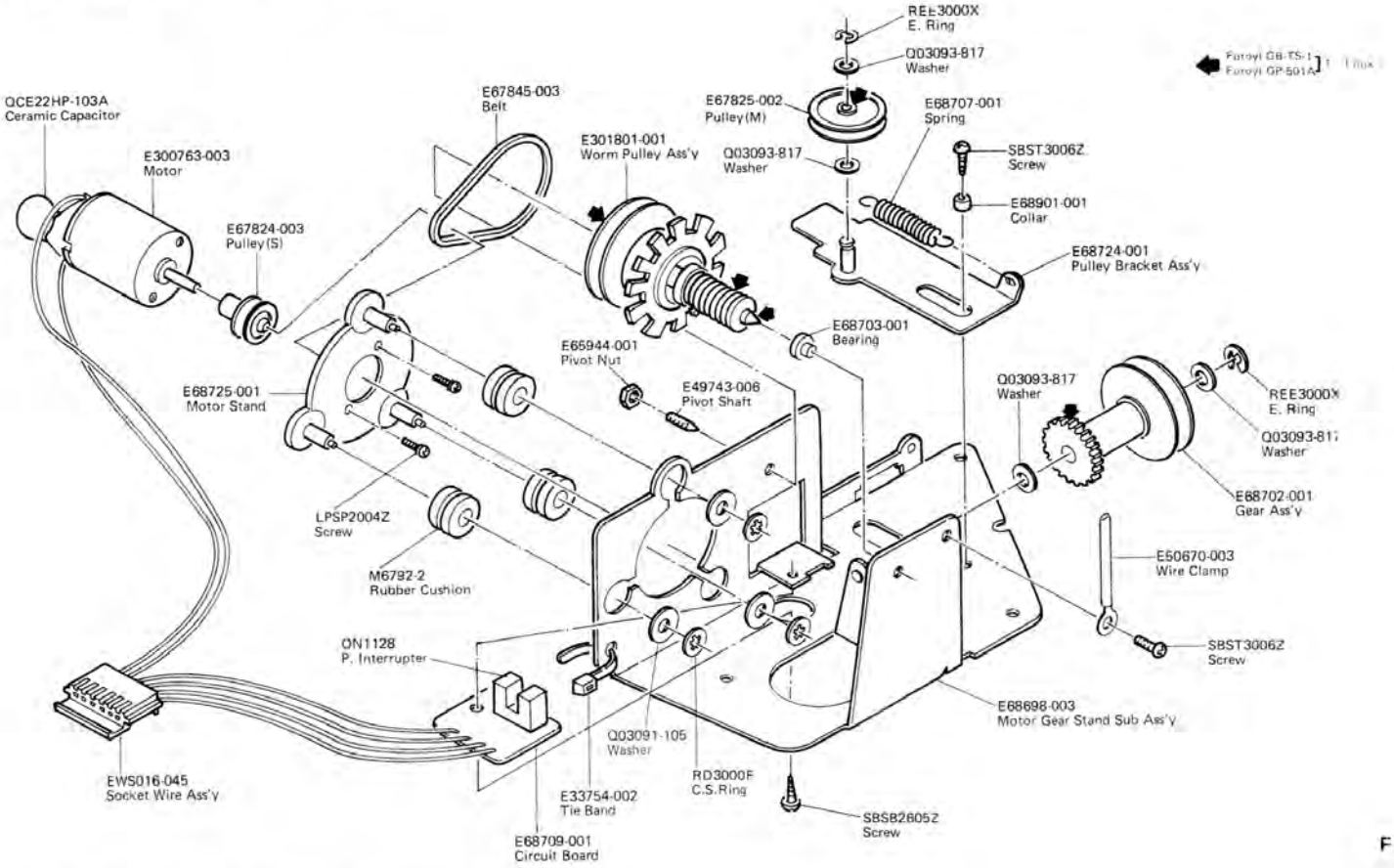

Fig. 17

10-(2) Mechanism Base Unit

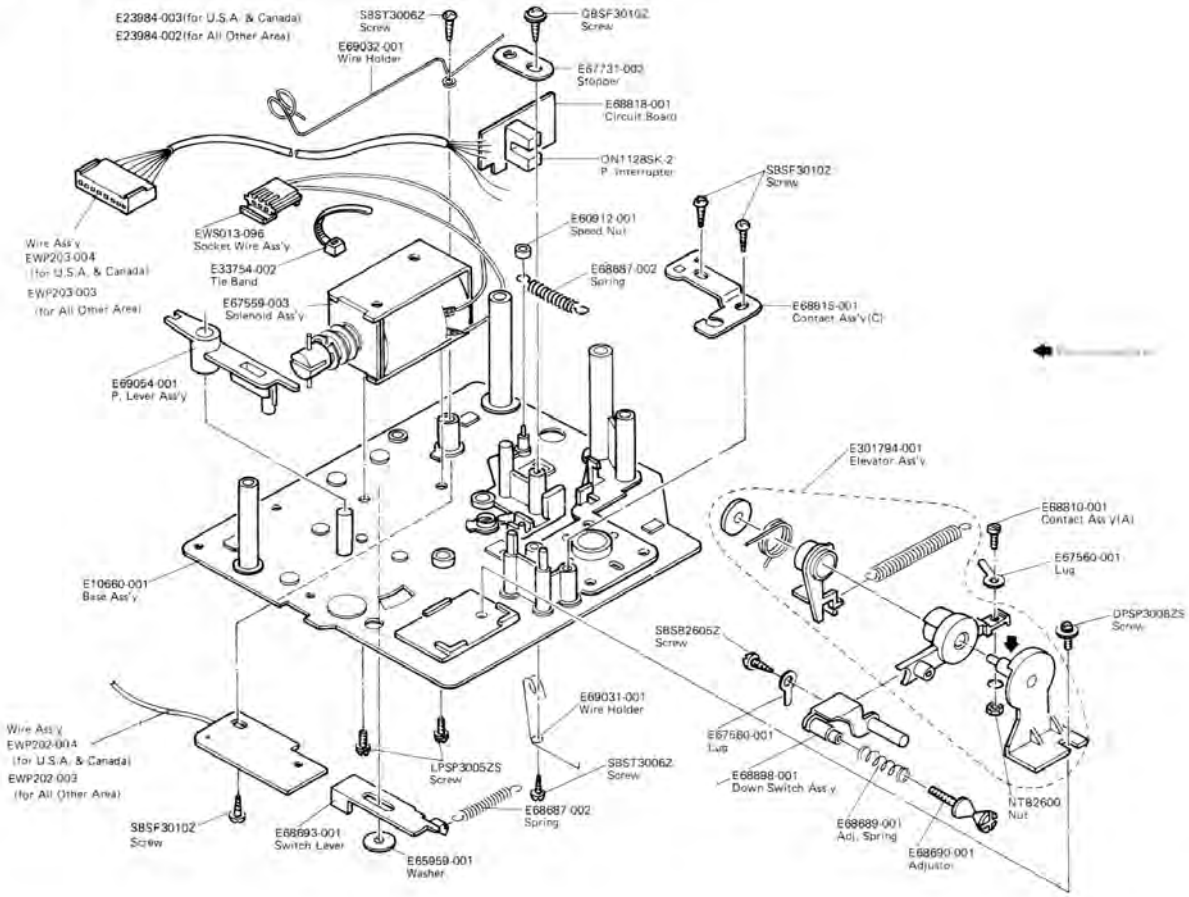

Fig. 18

L-E3
No. 2596

10-(3) Platter and Cabinet

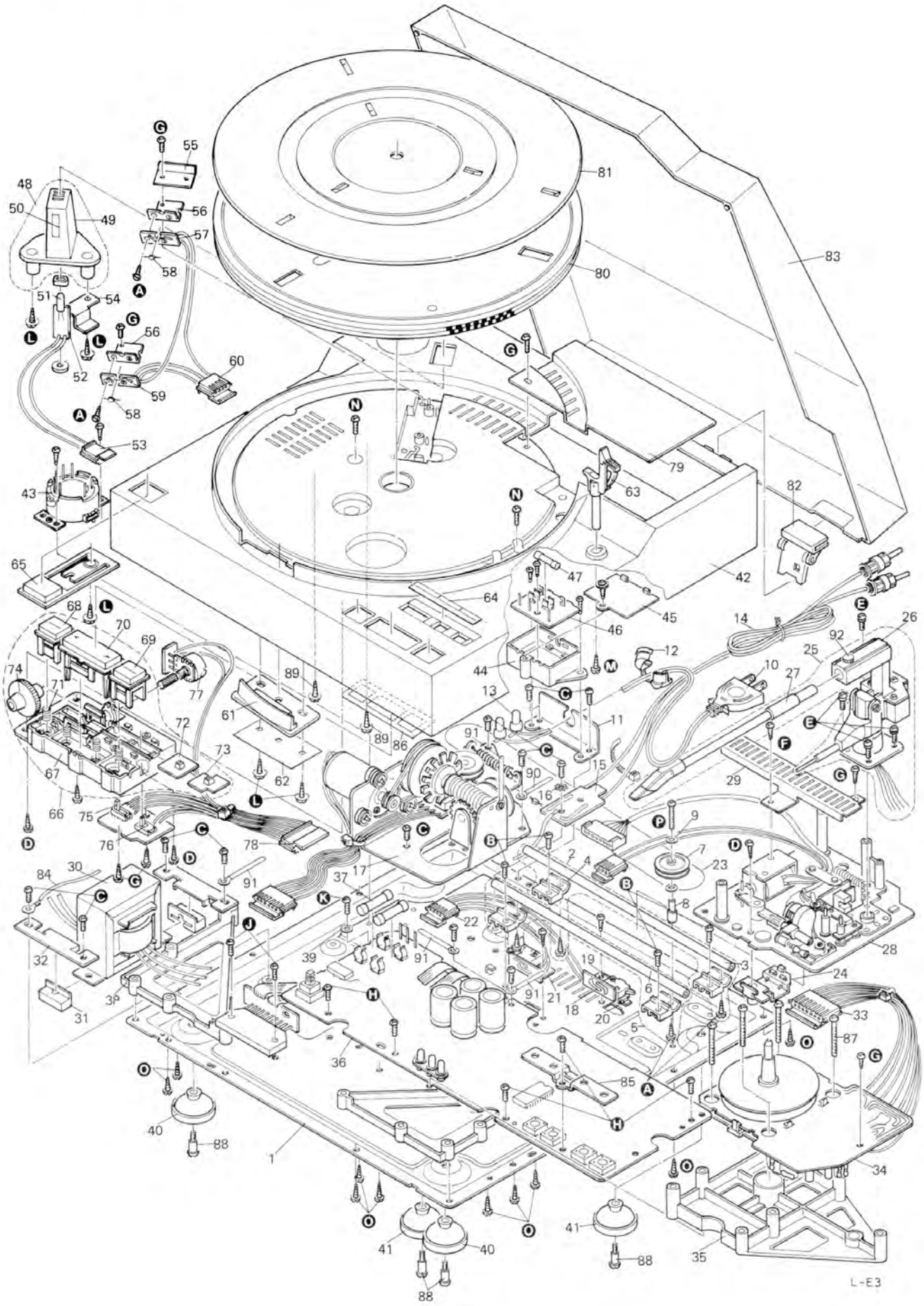

Fig. 19

Item No.	Part Number	Description	Q'ty
1	See page 24 (No. 1)	Bottom Board	1
2	E68733-001	Pipe Ass'y (Long)	1
3	E68694-001	Pipe	1
4	E68695-001	Pipe Holder	4
5	E68733-002	Pipe Ass'y (Short)	1
6	E68694-002	Pipe	1
7	E67825-002	Pulley (M)	1
8	E68696-001	Collar	1
9	Q03093-817	Washer	2
10	See page 24 (No. 2)	Power Cord ⚠	1
11	E68697-001	Bracket	1
12	See page 24 (No. 3)	Cord Stopper ⚠	1
13	See page 24 (No. 7)	Connector ⚠	2
14	E03697-005	Signal Cord	1
15	E68823-001	Circuit Board	1
16	WBS3000N	Washer	1
17	See page 14 (Fig. 17)	Motor Gear Unit	1
18	E68711-001	Circuit Board	1
19	QSS1201-034	Slide Switch	2
20	E68712-001	Bracket	1
21	E68712-002	Bracket	1
22	EWS014-061	Socket Wire Ass'y	1
23	E68713-001	Wire Rope	1
24	E301904-001	Hook	1
25	MP-330S	Pick-up Ass'y	1
26	E301890-001	Tonearm Ass'y	1
27	E301954-001	Cartridge Arm Ass'y	1
	MD1044Z	Cartridge Body Ass'y	1
	DT-37	Stylus	
	E69290-002	Stylus Cover	
28	See page 14 (Fig. 18)	Mechanism Base Ass'y	1
29	E301798-001	Mask	1
30	See page 24 (No. 5)	Power Transformer ⚠	1
31	E61824-002	Cushion	2
32	See page 24 (No. 6)	Transformer Plate	2
33	EWS017-035	Socket Wire Ass'y	1
34	MC942B2	Motor Ass'y	1
35	E301804-001	Motor Holder	1
36	See page 24 (No. 21)	Main P.C. Board Ass'y	1
37	See page 24 (No. 9)	Fuse ⚠	2
38	E301807-001	C. Board Holder	2
39	WNS3000N	Washer	1
40	See page 24 (No. 13)	Foot Ass'y (Front)	2
41	See page 24 (No. 14)	Foot Ass'y (Rear)	2
42	See page 24 (No. 15)	Cabinet	1
43	See page 24 (No. 10)	Voltage Selector ⚠	1
44	See page 24 (No. 11)	C.B. Case	1
45	See page 24 (No. 12)	C.B. Cover	1
46	See page 24 (No. 17)	P.C. Board Ass'y	1
47	See page 24 (No. 8)	Fuse ⚠	1
48	E68717-001	Lamp House Ass'y	1
49	E301808-001	Lamp Hause	1
50	E68718-001	Lens	1
51	QLP3204-001	Lamp	1
52	E68805-001	Circuit Board	1
53	EWS013-095	Socket Wire Ass'y	1
54	E69184-001	Holder	1
55	E69223-001	Mask Bracket	1
56	E68720-001	Lamp Holder	1
57	E68804-001	Circuit Board	1
58	PH101	Photo Transistor	2
59	E68720-002	Lamp Holder	1
60	EWS014-058	Socket Wire Ass'y	1
61	E301809-001	Strobo Lens	1
62	E68721-002	Sheet	1
63	E65824-004	Rest Ass'y	1
64	E68722-001	Escutcheon	1
65	E301887-002	Button (READY)	1
66	E301810-001	Button Ass'y	1
67	E23991-001	Escutcheon	1
68	E301888-001	Button (UP/DOWN)	1
69	E301896-001	Button (START/STOP)	1
70	E301889-001	Button	1
71	E68824-001	Spring	4
72	E68726-001	Slide Knob	1

Item No.	Part Number	Description	Q'ty
73	E68727-001	Slide knob	1
74	E68728-001	Volume Knob	
75	QSS1301-102	Slide Switch	1
76	QSS2201-024	Slide Switch	1
77	QVG4A2B-054V	Volume Resistor	1
78	EWS018-028	Socket Wire Ass'y	1
79	E301813-001	Cover	1
80	E23952-001	Platter	1
81	See page 24 (No. 16)	Platter Covering	1
82	E68806-002	Hinge Ass'y	2
83	E10663-001	Dust Cover Ass'y	1
84	EWP011-039	Terminal Wire	1
85	E69083-001	Earth Plate	1
86	E69149-001	Button Sheet	1
87	E69029-001	Screw (for Motor)	4
88	E68614-002	" (for Foot)	4
89	E65923-001	"	2
90	E50670-003	Wire Clamp	1
91	E50670-005	"	4
92	E68762-001	Finger Screw	1
Ⓐ	SBSB2605Z	Screw	6
Ⓑ	SBST3008Z	"	4
Ⓒ	SBST3006Z	"	10
Ⓓ	SBSF3010Z	"	3
Ⓔ	LPSP3008ZS	"	4
Ⓕ	LPSP3005ZS	"	1
Ⓖ	SBSF3008Z	"	8
Ⓗ	SBST3016Z	"	6
Ⓙ	SBST3010Z	"	2
Ⓚ	SBST3018Z	"	1
Ⓛ	GBSF3010Z	"	5
Ⓜ	GBSF3012Z	"	1
Ⓝ	SPST3012Z	"	2
Ⓞ	SBSF3012Z	"	10
Ⓟ	SPST3016Z	"	1

⚠ Safety parts

11. Printed Circuit Board Ass'y and Parts List

11-(1) TXX-367 □ Main Amp., Power Supply & Control P.C. Board Ass'y

Note (1): The number of TXX-367 □ varies according to the area employed. See below table.

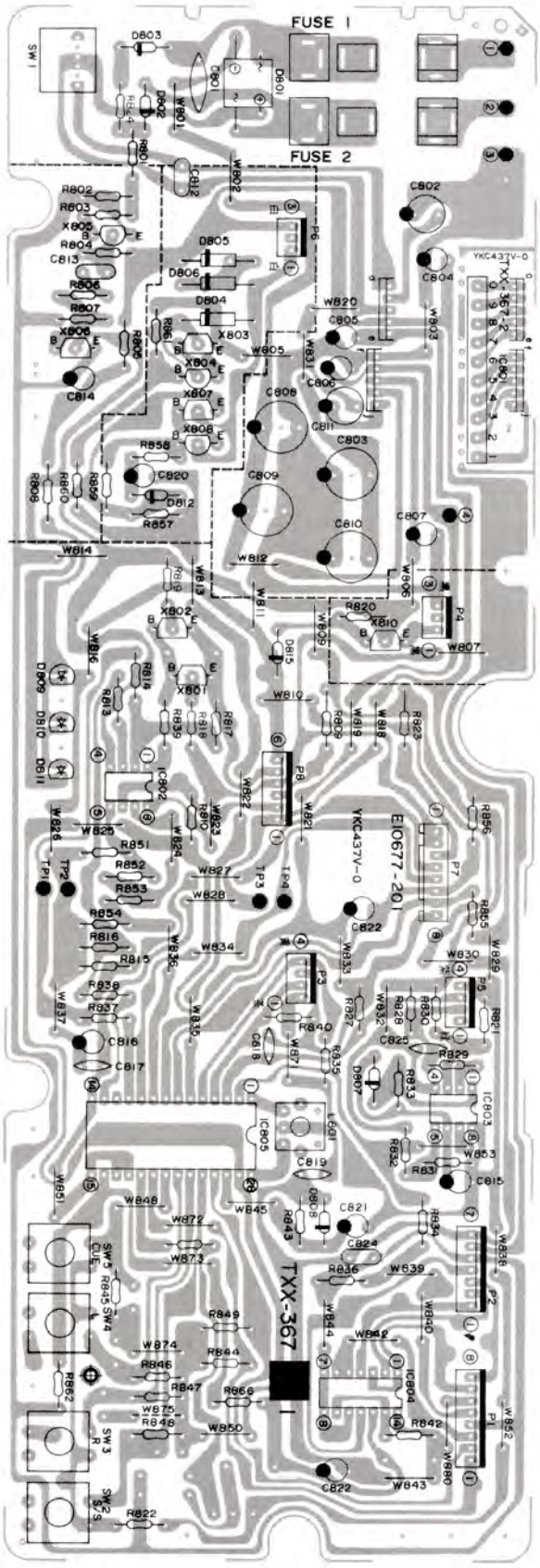

Fig. 20

Designated Areas	PC Board Ass'y
U.S.A. & Canada	TXX-367 B
All Other Areas	TXX-367 C

Note (2): The symbols (赤, 黒 , 白 . . . etc.) on P.C. Board surface are factory process only.

Transistors

Item No.	Part Number	Rating	Description	Maker
X801	2SD571 (L, K)		Silicon	NEC
X802	2SB605 (K, L)		"	"
X803	2SD571 (L, K)		"	"
X804	2SC945A (P, Q)		"	"
X805	2SC945A (P, Q)		"	"
X806	2SD571 (L, K)		"	"
X807	2SD571 (L, K)		"	"
X808	2SC945A (P, Q)		"	"
X810	2SB605 (K, L)		"	"
X820	PH101		Photo Transistor	"
X821	PH101		"	"

Integrated Circuit

Item No.	Part Number	Rating	Description	Maker
IC801	STK5416		I.C.	Sanyo
IC802	AN6552		"	Matsushita
IC803	AN6552		"	"
IC804	TC4016BP		"	Toshiba
IC805	UPD554C-096		"	NEC

Diodes

Item No.	Part Number	Rating	Description	Maker
D801	ESAB03-02A		Silicon	Fujidenki△
D802	1S2076-31		"	Hitachi
D803	1S2076-31		"	"
D804	ERB12-02RKL1		"	Fujidenki
D805	ERB12-02RKL1		"	"
D806	ERB12-02RKL1		"	"
D807	1S2076-31		"	Hitachi
D808	1S2076-31		"	"
D809	SR603C		L.E.D.	NEC
D810	SR603C		"	"
D811	SR603C		"	"
D812	1S2076-31		Silicon	Hitachi
D815	1S2076-31		"	"

Coils

Item No.	Part Number	Rating	Description
L801	E03062-44		OSC Coil

Capacitors

Item No.	Part Number	Rating		Description
C801	QCE22HP-103	0.01 μF	50 V	Ceramic
C802	QET51HM-476	47 μF	50 V	Electrolytic
C803	QET51VM-108	1000 μF	35 V	"
C804	QET51CM-476	47 μF	16 V	"
C805	QET51CM-476	47 μF	16 V	"
C806	QET51CM-476	47 μF	16 V	"
C807	QET51CM-476	47 μF	16 V	"
C808	QET51VM-108	1000 μF	35 V	"
C809	QET51VM-108	1000 μF	35 V	"
C810	QET51VM-108	1000 μF	35 V	"
C811	QET51HM-476	47 μF	50 V	"
C812	QFM81HK-104	0.1 μF	50V	Mylar
C813	QFM81HK-473	0.047 μF	50 V	"
C814	QET51HM-476	47 μF	50 V	Electrolytic
C815	QET51HM-105	1.0 μF	50 V	"
C816	QET51CM-476	47 μF	16 V	"
C817	QCF21HP-223	0.022 μF	50 V	Ceramic
C818	QCF21HP-223	0.022 μF	50 V	Ceramic
C819	QCF21HP-103	0.01 μF	50 V	"
C820	QET51EM-226	22 μF	25 V	Electrolytic
C821	QET51EM-106	10 μF	25 V	"
C822	QET51HM-475	4.7 μF	50 V	"
C824	QFM81HK-104	0.1 μF	50 V	Mylar
C825	QCF21HP-223	0.022 μF	50 V	Ceramic
C826	QET51HM-474	0.47 μF	50 V	Electrolytic

Resistors

Item No.	Part Number	Rating		Description
R839	QRD141J-102S	1 k	1/4 W	Carbon
R840	QRD141J-183S	18 k	1/4 W	"
R842	QRD141J-183S	18 k	1/4 W	"
R843	QRD141J-103S	10 k	1/4 W	"
R844	QRD141J-183S	18 k	1/4 W	"
R845	QRD141J-183S	18 k	1/4 W	"
R846	QRD141J-183S	18 k	1/4 W	"
R847	QRD141J-183S	18 k	1/4 W	"
R848	QRD141J-183S	18 k	1/4 W	"
R849	QRD141J-183S	18 k	1/4 W	"
R851	QRD141J-103S	10 k	1/4 W	"
R852	QRD141J-104S	100 k	1/4 W	"
R853	QRD141J-104S	100 k	1/4 W	"
R854	QRD141J-683S	68 k	1/4 W	"
R855	QRD141J-564S	560 k	1/4 W	"
R856	QRD141J-564S	560 k	1/4 W	"
R857	QRD141J-563S	56 k	1/4 W	"
R858	QRD141J-564S	560 k	1/4 W	"
R859	QRD141J-124S	120 k	1/4 W	"
R860	QRD141J-563S	56 k	1/4 W	"
R861	QRD141J-564S	560 k	1/4 W	"
R862	QRD141J-563S	56 k	1/4 W	"
R866	QRD141J-273S	27 k	1/4 W	"

Resistors

Item No.	Part Number	Rating		Description
R801	QRD141J-154S	150 k	1/4 W	Carbon
R802	QRD141J-103S	10 k	1/4 W	"
R803	QRD141J-152S	1.5 k	1/4 W	"
R804	QRD141J-222S	2.2 k	1/4 W	"
R805	QRZ0052-470	47	1/4 W	Fusible ⚠
R806	QRD141J-153S	15 k	1/4 W	Carbon
R807	QRD141J-473S	47 k	1/4 W	"
R808	QRD129J-470S	47 k	1/2 W	" ⚠
R809	QRD129J-222	2.2 k	1/2 W	" ⚠
R810	QRD141J-273S	27 k	1/4 W	"
R811	QRD141J-102S	1 k	1/4 W	"
R813	QRD141J-333S	33 k	1/4 W	"
R814	QRD141J-333S	33 k	1/4 W	"
R815	QRD141J-392S	3.9 k	1/4 W	"
R816	QRD141J-392S	3.9 k	1/4 W	"
R817	QRD141J-474S	470 k	1/4 W	"
R818	QFZ0052-100	10	1/4 W	Fusible (for C)⚠
R819	QFZ0052-100	10	1/4 W	" (for C)⚠
R820	QRD141J-122S	1.2 k	1/4 W	Carbon
R821	QRD141J-103S	10 k	1/4 W	"
R822	QRD141J-222S	2.2 k	1/4 W	"
R823	QRD129J-222	2.2 k	1/2 W	" ⚠
R824	QRZ141J-133S	13 k	1/4 W	Fusible (For C)
R827	QRD141J-155S	1.5 m	1/4 W	Carbon
R828	QRD141J-684S	680 k	1/4 W	"
R829	QRD141J-102S	1 k	1/4 W	"
R830	QRD141J-473S	47 k	1/4 W	"
R831	QRD141J-103S	100 k	1/4 W	"
R832	QRD141J-223S	22 k	1/4 W	"
R833	QRD141J-105S	1 M	1/4 W	"
R834	QRD141J-153S	15 k	1/4 W	"
R835	QRD141J-183S	18 k	1/4 W	"
R836	QRD141J-223S	22 k	1/4 W	"
R837	QRD141J-303S	30 k	1/4 W	"
R838	QRD141J-333S	33 k	1/4 W	"

Others

Item No.	Part Number	Rating	Description
SW1	QSP0410-001		Push Switch
SW2	ESP0001-005		"
SW3	ESP0001-005		"
SW4	ESP0001-005		"
SW5	ESP0001-005		"
P1	QMV5005-008		8P Plug Ass'y
P2	QMV5005-007		7P "
P3	QMV5005-004		4P "
P4	QMV5005-003		3P "
P5	QMV5005-004		4P "
P6	QMV5005-003		3P "
P7	E03686-008J		8P "
P8	QMV5005-006		6P "
	EWR35A-15NN		Flat Wire
	E301811-001		Spacer
	E43727-002		Tab
	E45524-002		Fuse Clip (for B)
	E48965-002		" (for C)
	E10677-101		Circuit Board (for B)
	E10677-201		" (for C)

11-(2) MC-942B2 Motor Drive P.C. Board Ass'y

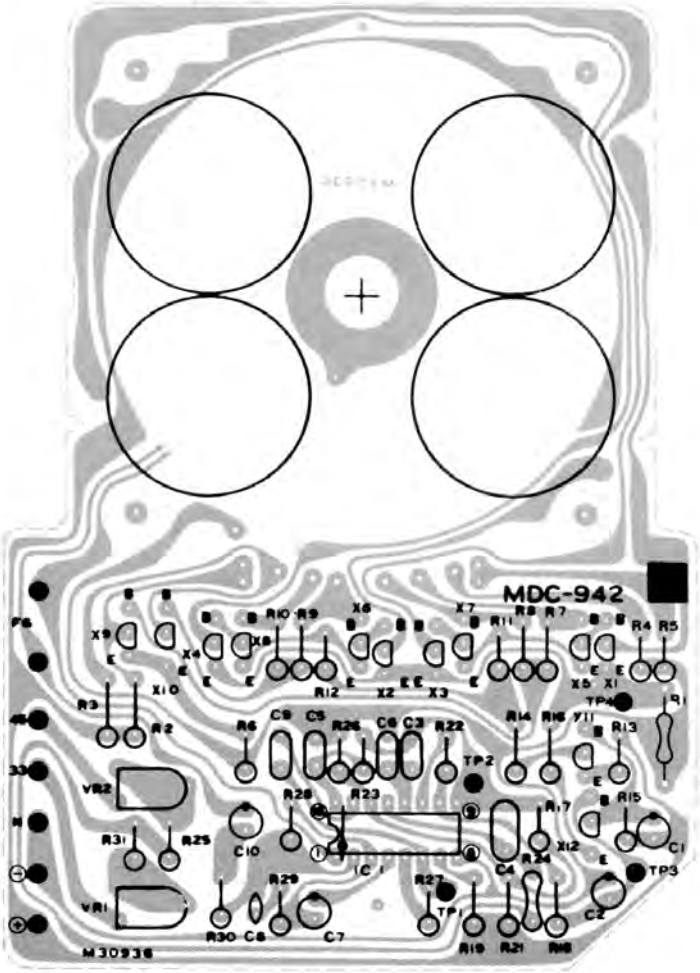

Fig. 21

Transistors

Item No.	Part Number	Rating		Description	
		Pc	fT		Maker
X1	2SC2001(L,K)	0.6 W	170 MHz	Silicon	NEC
X2	2SC2001(L,K)	"	"	"	"
X3	2SC2001(L,K)	"	"	"	"
X4	2SC2001(L,K)	"	"	"	"
X5	2SA733A(P,Q)	0.25 W	180 MHz	"	"
X6	2SA733A(P,Q)	"	"	"	"
X7	2SA733A(P,Q)	"	"	"	"
X8	2SA733A(P,Q)	"	"	"	"
X9	2SC945A(P,K)	"	250 MHz	"	"
X10	2SC945A(P,K)	"	"	"	"
X11	2SA733A(P,K)	"	180 MHz	"	"
X12	2SC945A(P,K)	"	250 MHz	"	"

Integrated Circuit

Item No.	Part Number	Rating	Description	
		Pc		Maker
IC 1	VC1029		I.C.	NEC

Capacitors

Item No.	Part Number	Rating		Description
C1	QET41HR-474	0.47 μF	50 V	Electrolytic
C2	QET41ER-475	4.7 μF	25 V	"
C3	QFM41HK-103	0.01 μF	50 V	Mylar
C4	AMX104J50	0.1 μF	"	"
C5	QFM41HK-472	0.0047 μF	"	"
C6	QFM41HK-103	0.01 μF	"	"
C7	QET41ER-475	4.7 μF	25 V	Electrolytic
C8	QCY41HK-102	0.001 μF	50 V	Ceramic
C9	QFM41HK-103	0.01 μF	"	Mylar
C10	QET41VR-106	10 μF	35 V	Electrolytic

Resistors

Item No.	Part Number	Rating		Description
VR1	RVAV310-473	47 kΩ	0.1 W	Variable
VR2	RVAV310-473	"	"	"
R1	QRX016J-3R9	3.9 Ω	1 W	Metal
R2	QRD141J-102	1 kΩ	1/4 W	Carbon
R3	QRD141J-102	"	"	"
R4	QRD141J-102	"	"	"
R5	QRD141J-102	"	"	"
R6	QRD141J-332	3.3 kΩ	"	"
R7	QRD141J-472	4.7 kΩ	"	"
R8	QRD141J-472	"	"	"
R9	QRD141J-472	"	"	"
R10	QRD141J-472	"	"	"
R11	QRD141J-680	68 Ω	"	"
R12	QRD141J-680	"	"	"
R13	QRD141J-221	220 Ω	"	"
R14	QRD141J-122	1.2 kΩ	"	"
R15	QRD141J-332	3.3 kΩ	"	"
R16	QRD141J-181	180 Ω	"	"
R17	QRD141J-333	33 kΩ	"	"
R18	QRD141J-222	2.2 kΩ	"	"
R19	QRD141J-681	680 Ω	"	"
R21	QRD141J-204	200 kΩ	1/4 W	Carbon
R22	QRD141J-104	100 kΩ	"	"
R23	QRD141J-683	68 kΩ	"	"
R24	RE55YQ-160KF	160 kΩ	"	"
R25	QRD141J-562	5.6 kΩ	"	Carbon
R26	QRD141J-103	10 kΩ	"	"
R27	QRD141J-105	1 kΩ	"	"
R28	QRD141J-824	820 kΩ	"	"
R29	QRD141J-103	10 kΩ	"	"
R30	QRD141J-102	1 kΩ	"	"
R31	QRD141J-823	82 kΩ	"	"

Others

Item No.	Part Number	Rating	Description
	VHE-610F		Hall Generator
	M40330		H.G. Circuit Board
	M30936		P. Circuit Board

12. Power Cord Connections in Different Areas

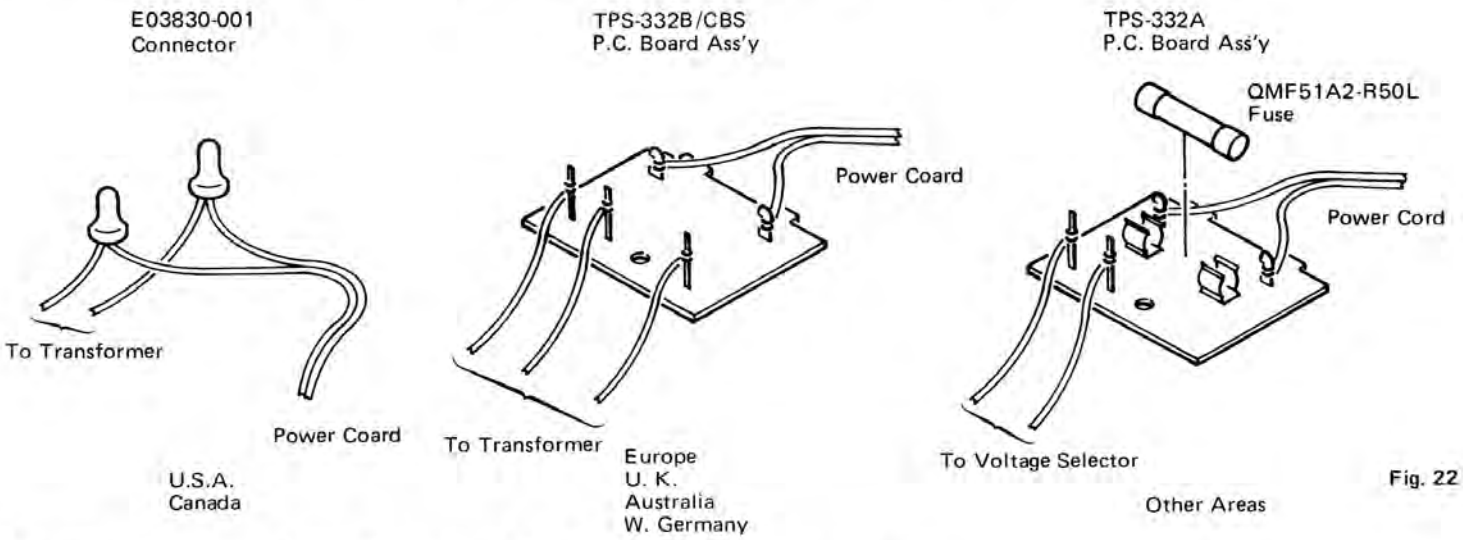

Fig. 22

12-(1) How to Handle the Solderless Connector

In this turntable, a solderless connector is used to connect the power cord with the primary lead wire of the power transformer.
When it is unavoidable to replace this connector for replacement of the power transformer, or the like, positively perform the replacement in accordance with the following procedure to avoid dangers.

- **Connector part number**
  E03830-001
- **Tools**
  Tool for installing solderless connectors.
  Do not use those (small cutting pliers, etc.) other than regular tools.
  Example: VACO No. 1963 (Courtesy Vaco Products Co.)

Fig. 23

- **Replacement**

1. Cut both the power cord and the primary lead wire at near the edge of the connector to be replaced.
   Note: Do not re-use the used connector.

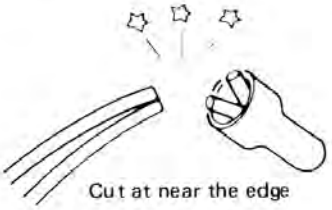

Fig. 24

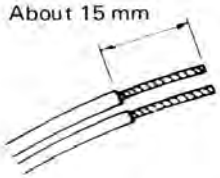

Fig. 25

2. Peel off the coverings so that the respective conductor tops appear by about 15 mm as shown in the Fig. 25.
   Note: In the case of stranded wires, test each wire.
3. Adjust the tips of the power cord and the primary lead wire with each other, then securely insert them into the connector as shown in the Fig. 26.

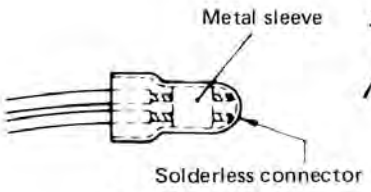

Fig. 26

Fig. 27

4. Secure the nearly equal central part of the metal sleeve with the second concave of the tool for solderless securing as shown in the Fig. 27.
   Note: Perform a complete securing.
5. After solderless securing, check the following as shown in the Fig. 28.
   Note: Protect connector with isolation tape or vinyl tube for safety. Furthermore, clamp it for out of touch with metal part.

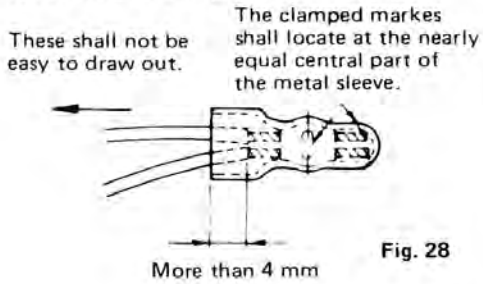

Fig. 28

13. Packing Materials and Part Numbers

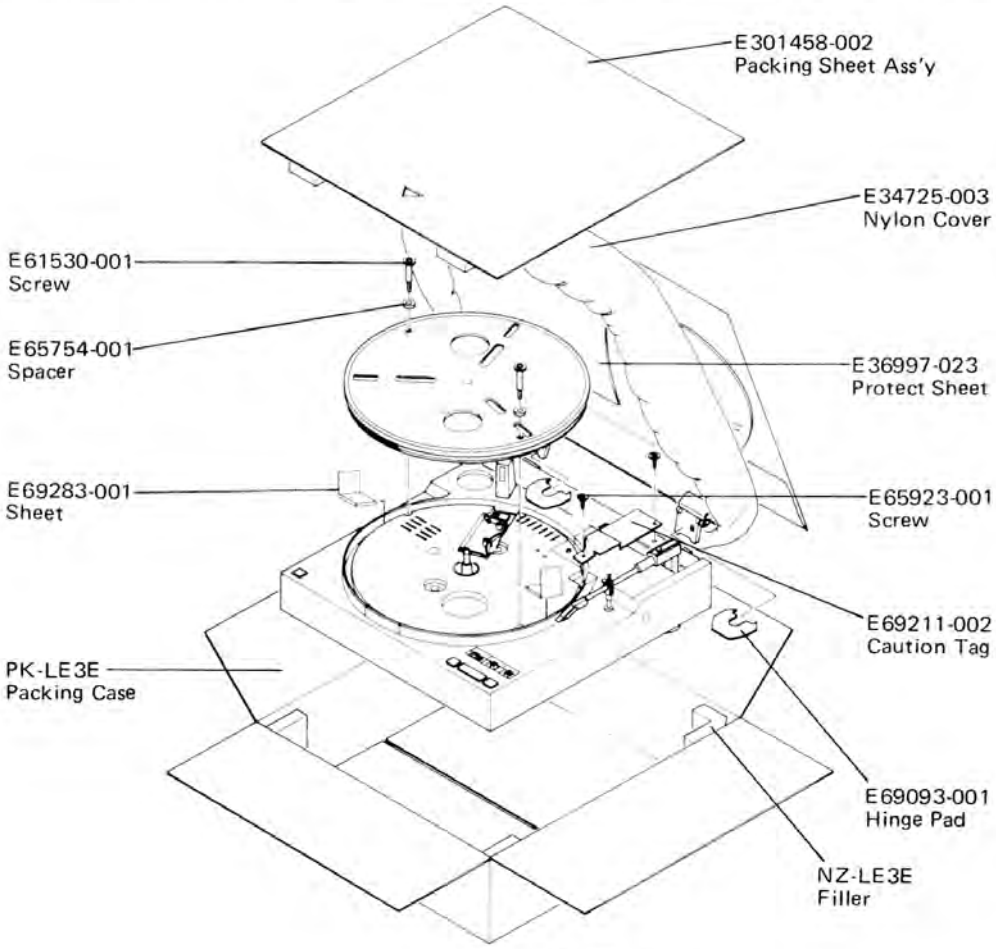

Fig. 29

14. Accessories List

Item No.	Description	U.S.A. & (Canada)	Europe & (W. Germany)	U.K.	Australia	U.S. Military Market & (Other Countries)
1	Instruction Book	E30580-1007A (")	E30580-1007A (")	E30580-1007ABS	E30580-1007A	E30580-1007A
2	Warranty Card	BT20047 (BT20025E)	— (BT20057)	BT20013C	BT20029C	BT20047
3	Service Information Card	BT20046A (—)	—	—	—	BT20046A (—)
4	Safety Instruction	BT20044B (—)	—	—	—	—
5	EP Adaptor	E66329-002 (")	E66329-002 (")	E66329-002	E66329-002	E66329-002 (")
6	Strobo Plate	E68164-001 (")	E68164-001 (")	E68164-001	E68164-001	E68164-001 (")
7	Siemens Plug					— (E04056)
8	Envelope (for W. Card)	E66416-003 (—)	—	—	—	—
9	Envelope (for I.B.)	E300196-010 (")	E300196-010 (")	E300196-010	E300196-010	E300196-010 (")

15. L-E3 Schematic Diagram (For motor driving schematic diagram, refer to page 23)

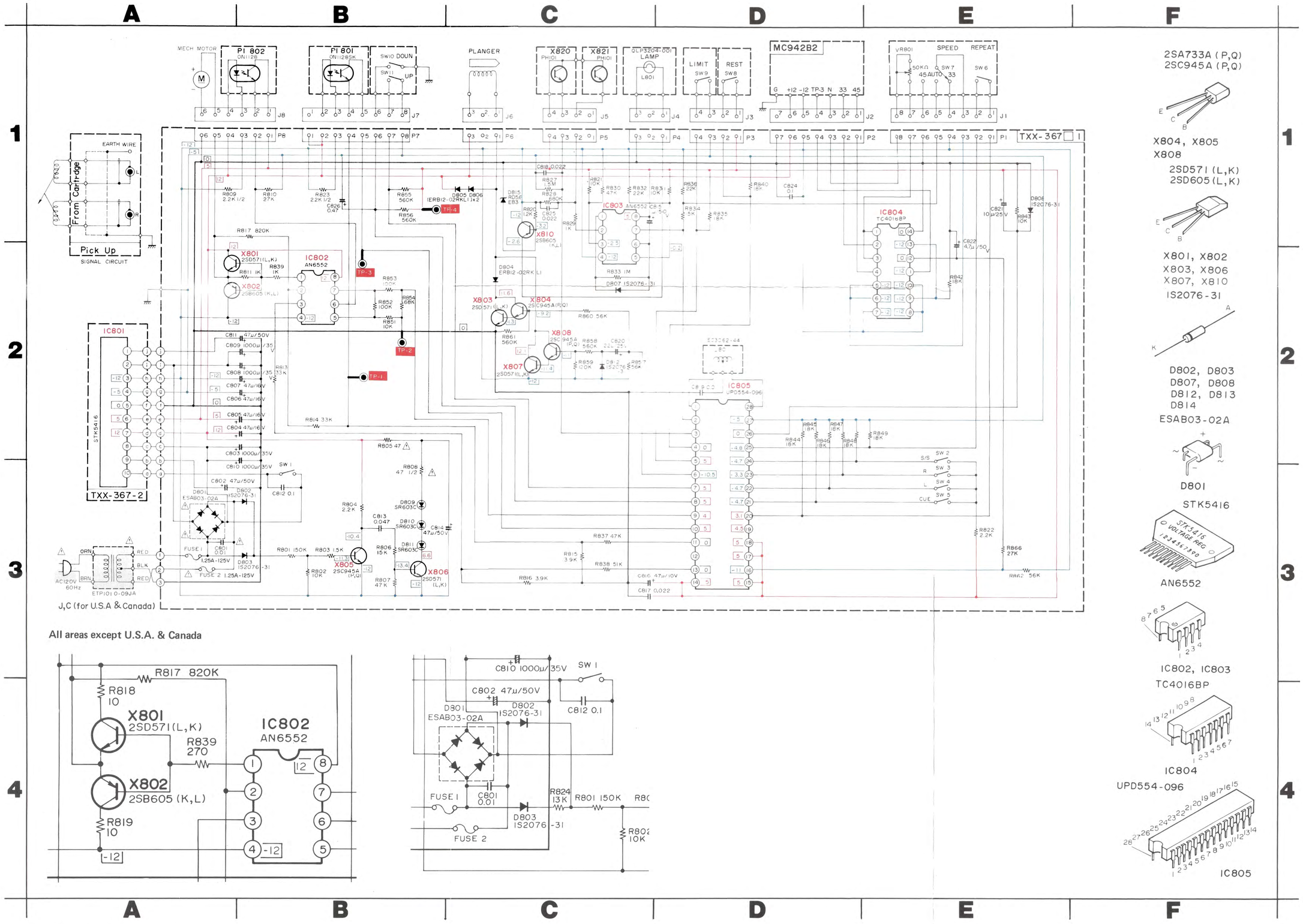

All areas except U.S.A. & Canada

Printed Circuit Board Ass'y Locations

P.C. Board Ass'y	Description	Page
TXX-367□	Main Amp., Power Supply & Control P.C. Board Ass'y	17
MC-942B2	Motor Driving P.C. Board Ass'y	19

Notes:

1. —— indicates positive B (+) power supply.
2. —— indicates negative B (−) power supply.
3. ▬ indicates signal path.
4. Voltage values measured with a tester (impedance 20 kΩ/V) in mode of "3-1/3 r.p.m." are indicated as below.
   Example: +12, −12 (unit: V)
5. When replacing the parts in the darkened area ( ) and those marked with ⚠, be sure to use the designated parts to ensure safety.
6. This is the standard circuit diagram.
   The design and contents are subject to change without notice.

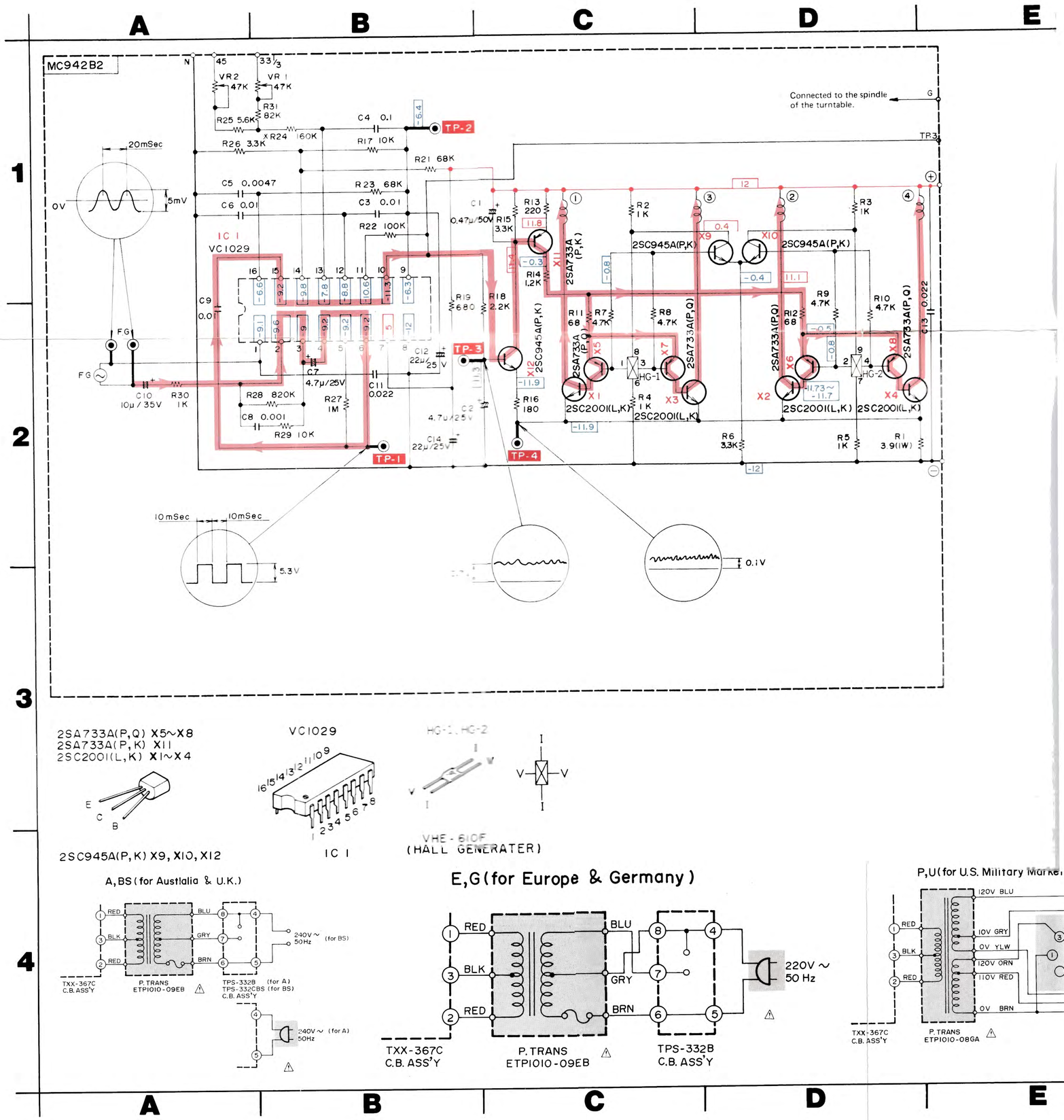

2SA733A(P,Q) X5~X8
2SA733A(P,K) X11
2SC2001(L,K) X1~X4

2SC945A(P,K) X9, X10, X12

VC1029

IC 1

HG-1, HG-2

VHE-610F
(HALL GENERATER)

A, BS (for Austlalia & U.K.)

E, G (for Europe & Germany)

P, U (for U.S. Military Market & Other areas)

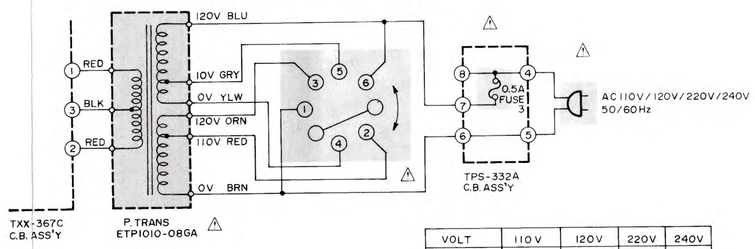

VOLT	110V	120V	220V	240V
CONNECTION	1-5, 2-6	1-4, 3-6	2-5	3-4

16. Parts List with Specified Numbers for Designated Areas

Item No.	Description	U.S.A. & Canada	Europe & W. Germany	U.K.	Australia	U.S. Military Market & Other Countries
1	Bottom Board	E10661-003	E10661-003	E10661-003	E10661-003	E10661-002
2	Power Cord ⚠	QMP1200-200	QMP3900-200	QMP9017-008BS	QMP2560-244	QMP7600-250
3	Cord Stopper ⚠	QHS3876-162	QHS3876-162	QHS3876-162BS	QHS3876-162	QHS3876-162
4	Mechanism Base Ass'y	E23984-003	E23984-004	E23984-004	E23984-004	E23984-004
5	Power Transformer ⚠	ETP1010-09JA	ETP1010-09EB	ETP1010-09EBBS	ETP1010-09EB	ETP1010-08GA
6	Transf. Plate	E67850-001	E69497-001	E69497-001	E69497-001	E67850-001
7	Connector ⚠	E03830-001	–	–	–	–
8	Fuse (Primary) ⚠	–	–	–	–	QMF51A2-R50L
9	Fuse (Secondary) ⚠	QMF61U1-1R25 (1.25A-125V)	QMF51A2-1R0L (T1A)	QMF51A2-1R0LBS (T1A)	QMF51A2-1R0L (T1A)	QMF51A2-1R0L (T1A)
10	Voltage Selector ⚠	–	–	–	–	QSR0085-001U
11	Circuit Board Case	–	E302244-001	E302244-001	E302244-001	E302244-001
12	Circuit Board Cover	–	E302246-001	E302246-001	E302246-001	E302246-001
13	Foot Ass'y (Front)	E301318-007	E301318-006	E301318-006	E301318-006	E301318-006
14	(Rear)	E301318-00C	E301318-00A	E301318-00A	E301318-00A	E301318-00A
15	Cabinet	E10662-002	E10662-003	E10662-003	E10662-003	E10662-003
16	Platter Covering	E23953-002	E23953-001	E23953-001	E23953-001	E23953-001
17	AC Connection P.C. Board Ass'y	–	TPS-332B	TPS-332CBS	TPS-332B	TPS-332A
18	Circuit Board (for TPS-332)	–	E302247-001	E302247-001BS	E302247-001	E302247-001
19	Tab (for TPS-332)	–	E65508-002 E43727-002	E65508-002 E43727-002	E65508-002 E43727-002	E65508-002 E43727-002
20	Fuse Clip (for TPS-332)	–	–	–	–	EMG7331-001
21	Main P.C. Board Ass'y	TXX-367B	TXX-367C	TXX-367C	TXX-367C	TXX-367C
22	Circuit Board (TXX-367)	E10677-101	E10677-201	E10677-201	E10677-201	E10677-201

⚠ Safety parts

17. Power Specifications

	Line Voltage & Frequency	Power Consumption
U.S.A. & Canada	AC 120 V∿, 60 Hz	18 watts
Europe & W. Germany	AC 220 V∿, 50 Hz	22 watts
U.K. & Australia	AC 240 V∿, 50 Hz	22 watts
U.S. Military Market	AC 110/120/220/240 V∿ Selectable, 50/60 Hz	22 watts
Other Areas	AC 110/120/220/240 V∿ Selectable, 50/60 Hz	22 watts

JVC

VICTOR COMPANY OF JAPAN, LIMITED, TOKYO, JAPAN

Printed i
2002-V